Medsys
Medical Systems

From Robotics to Surgical Instruments

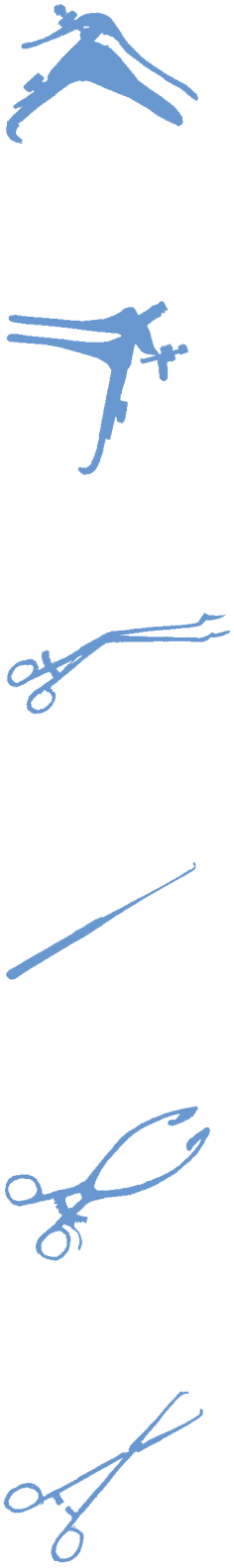

Table of Contents

A. LAPAROSCOPIC PRODUCTS

LAPMAN® 1-2
LAP LOOP 3-4
UTERINE MANIPULATOR 5

B. SPECIALITY PRODUCTS

NEXT 200 Monopolar/Bipolar Electrosurgical Generator 6
Non-Conductive Instruments 7
Universal Electrosurgical Accessories 8
Universal Reusable and Disposable Electrodes 8-9
Bipolar Forceps 9
Cervix dilators 10
Endometrial Samplers and Dilators 11
Cervix needle 11
Special Parametrium Scissors 26
Special Hysterectomy Clamps 32

C. COLPOSCOPY INSTRUMENTS

Biopsy Forceps 12-15
Endocervical and Endometrial Curettes 16
Tenacula 18
Cervical Hooks 18
Endocervical Specula 19
Vaginal Specula 19-20

D. GYNECOLOGICAL SURGICAL INSTRUMENTS

Sounds 17
Curettes 17
Uterine Cannula 17
Keyes Vulvar Punches 18
Lateral Vaginal Retractors 19-20
Vulsellum Forceps 21
Sponge Forceps 21
Scissors 22-26
Dissecting Forceps 27
Hemostatic Forceps 28-31
Hysterectomy Forceps 31-32
Retractors 33-34
Needle Holders 35-36
Monopolar Scissors 37
Monopolar Forceps 37

High Quality is Cost Effective !

Dear Customer,

Since years, MEDSYS has been developing and manufacturing products in the field of women's healthcare for its growing base of customers and distributors throughout the world.

With experienced staff in high quality surgical instruments, the company aims to continue the century old tradition of cutlery and surgical instrument manufacturing - combining high quality and innovation - of the town of Gembloux, Belgium.

We are pleased to introduce our new enlarged product catalog : it focuses on electro-surgery, general surgery instruments and introduces a few very innovative laparoscopic devices developed with European opinion leaders.

It is our belief that our quality is cost effective : our reusable products will last because they are made of selected raw material, manufactured by experienced collegues using appropriate equipment and according to international standards. MEDSYS provides a 1 year warranty on material and workmanship for all its reusable instruments and equipments, provided that the customer uses the products appropriately and applies "good maintenance practices" applicable to quality products.

MEDSYS' maintenance department provides further service for the repair of our surgical instruments and equipments. Don't hesitate to contact us for any question or troubleshooting related to the products.

As you read through this catalog, if you don't see what you need, please don't hesitate to contact our customer service department and ask for it. There is a good chance that our collegues can accomodate your demand.

We thank you for your continued confidence and look forward serving you into the future.

Sincerely,

Yves Delpire
Managing Director

LapMan®
Dynamic Laparoscope Driver

Get a stable image

Control your vision yourself

Make better use of your staff

"Control your vision yourself"

MedSYS

Introducing the LapMan® into the OR will :

Give back the surgeon the control of his vision

Improve image stability

Produce less eye fatigue

Free the Assistant for more rewarding tasks

Allow Solo Surgery

Features :

Rolling Base makes positioning easy, on either side of the operating table

Connection to laparoscope is easy, fast and scope independent

Set up takes less than 5 minutes

LapStick®:

Fits to any laparoscopic instrument (tailor-made clips)

Surgeon's index controls all scope movements

Sterile Disposable Device

Technical specifications

LapMan®

Weight : 50 Kgs
Dimensions :
Height : 1,2 - 1,5 m
Length : 0,7 m
Width : 0,36 m

LapStick®

Weight : 35 gr
Dimensions :
8,5 cm x 3 cm x 2 cm

"Control your vision yourself"

V 3.0 06/2007

Dequesne Lap Loop System

For laparoscopic total and subtotal hysterectomy

Safer : specifically designed system avoids possible damage by contact with surrounding tissues during sectioning.

Easier : once the Lap Loop is in place, the sectioning is performed in one single movement.

Faster : one movement replaces time consuming multiple incisions.

Video and publication[1] of Prof. J. DEQUESNE using Lap Loop System available on request

[1] Dequesne J, Schmidt N, Foidart JM, Gaspart U, new applications for the Lap Loop in Laparoscopic Surgery. Ref Gynecol Obstet 8 : 537-42

The Lap Loop System comprises a reusable instrument and a disposable Loop.

Introducer

- Female thread for insertion of the screw end of the Lap loop
- Socket for insertion of the ball end of the Lap loop

Sheath

- Distal end of the sheath is made out of carbon for full insulation

Electrode

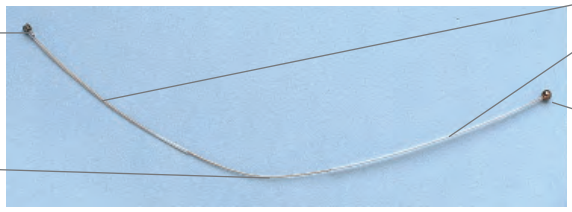

Patent pending

Procedure for use of Lap Loop System

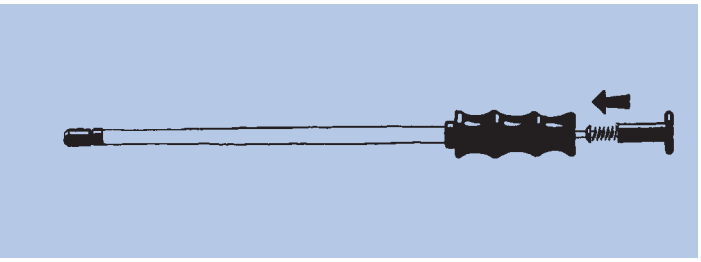

1. Insert the introducer in the sheath.

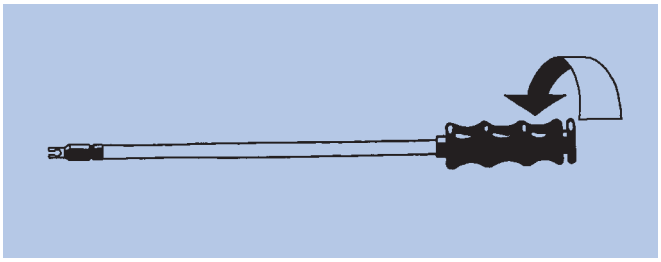

2. Push the introducer so that the distal tip extends out of the sheath and rotate the introducer to lock it in the sheath. (spring compressed)

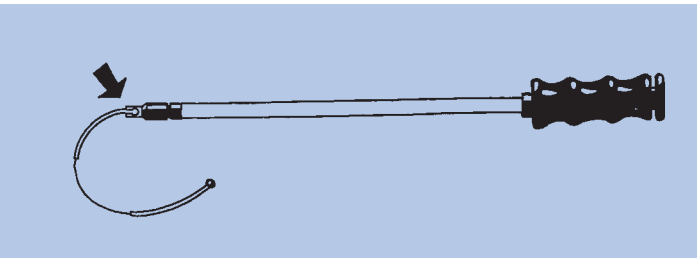

3. Screw the screw thread end of the Lap Loop electrode into the female thread at the distal tip of the introducer .

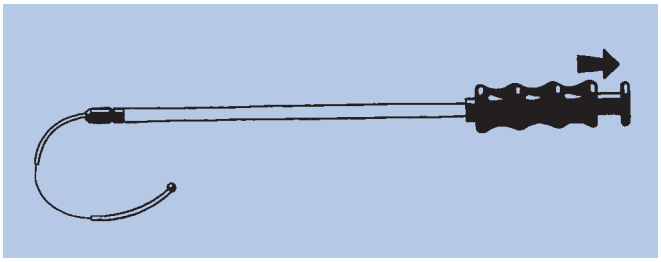

4. Unlock the introducer and pull back the introducer until the entire Loop is withdrawn inside the sheath.

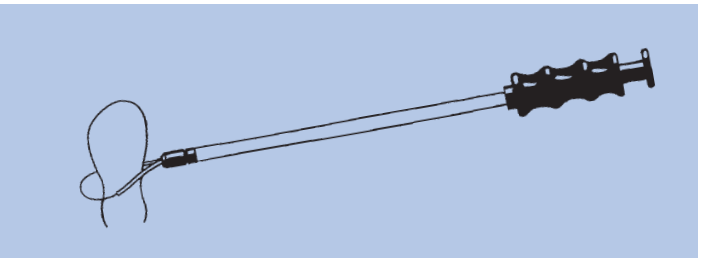

5. Insert the entire Lap Loop System through the trocar.

. Push the introducer so that the Loop is in the operating field. Compress spring, rotate and lock the introducer.

Position the Loop around the uterus.

Locate the ball end of the Loop electrode in the socket at the distal tip of the introducer, using forceps.

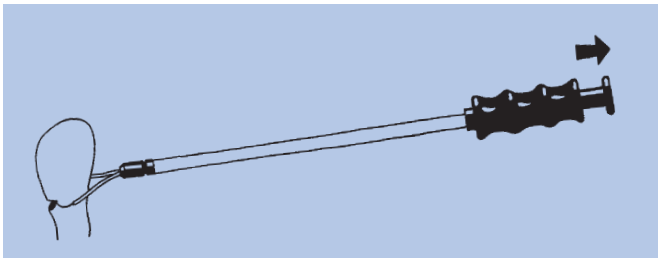

6. Rotate the introducer (spring decompressed) so that the Loop ends are completely withdrawn into the sheath.

Connect the monopolar cable adaptor and apply electrical current.

While maintaining the distal end of the sheath close to the uterus, pull back the introducer until uterus is sectioned,stop applying current and remove the monopolar cable adaptor.

Pull back the introducer until the entire Loop is in the sheath and remove sheath out of the trocar.

Remove the introducer out of the sheath, unscrew the Loop and discard it.

Order number :
110-030 Lap Loop instrument
120-060D Lap Loop Electrode (box of 5)

UTERINE MANIPULATOR

For laparoscopic hysterectomy

Coated for isolation

Anatomical :

design of the instrument allows LH in vast majority of cases

Easy :

- no complicated assembly or set-up prior to use
- cleaning and sterilisation as with standard instruments

Quick :

learning curve for placing the uterine manipulator and use of the instrument is short

Cost effective :

the device is fully reusable

Ergonomic handle for easy manipulation by the assistant

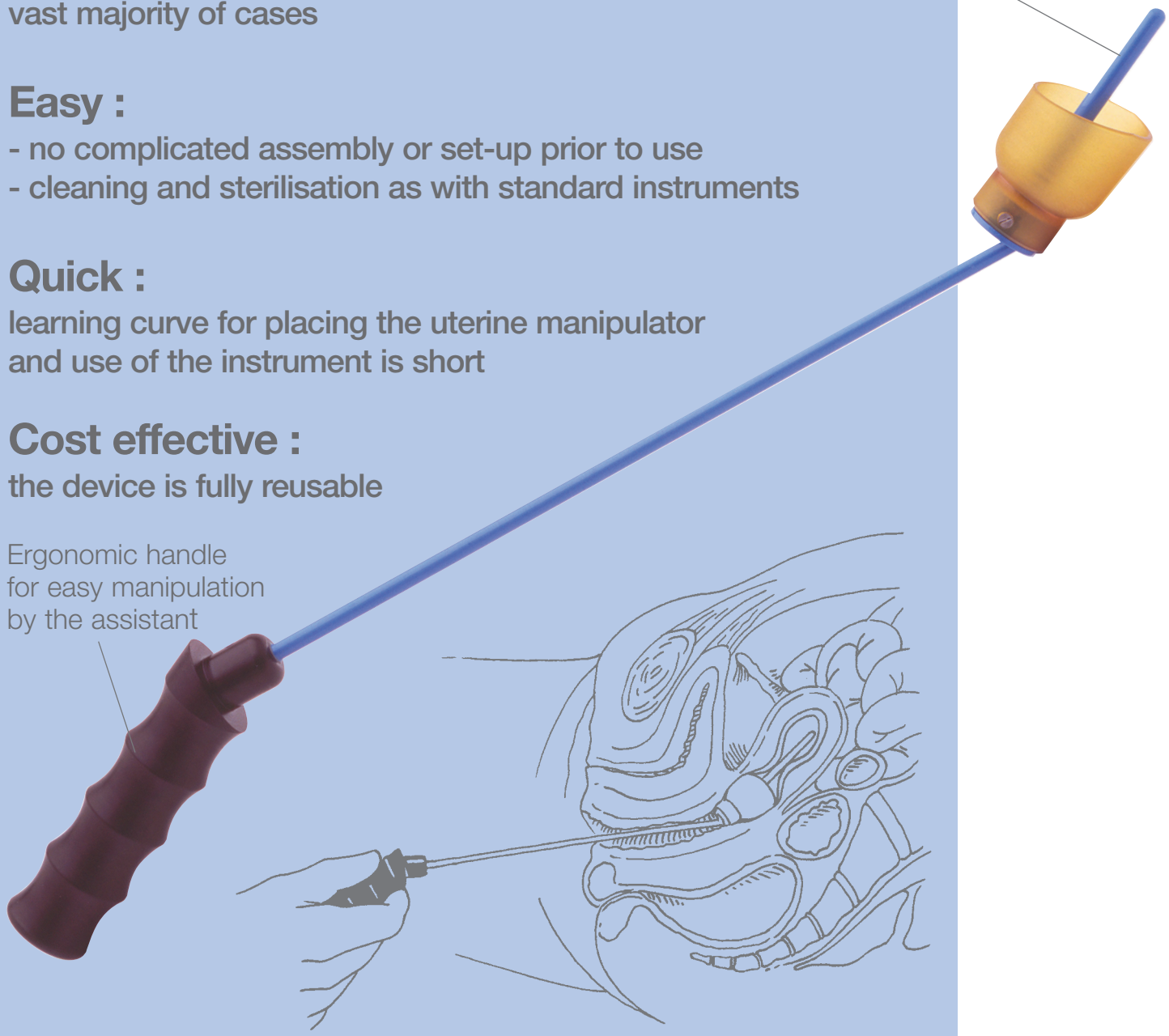

- Standard 3,5 cm internal diameter cup
- Transparent cup for visualisation during initial placement
- Cup design allows exposure of anatomical structures
- Isolated cup maintains pneumoperitoneum during most of colpotomy

Med SYS

Next 200

The Next Mono-Bipolar ElectroSurgical System for clinics, offices and operating rooms

- Unique Single Pulse
- Repeat Pulse
- Super Pulse Modes
- Less heat diffusion
- Many applications
- Easy to operate

GYNAECOLOGY / DERMATOLOGY / GENERAL SURGERY / ENT / PLASTIC SURGERY

Med SYS

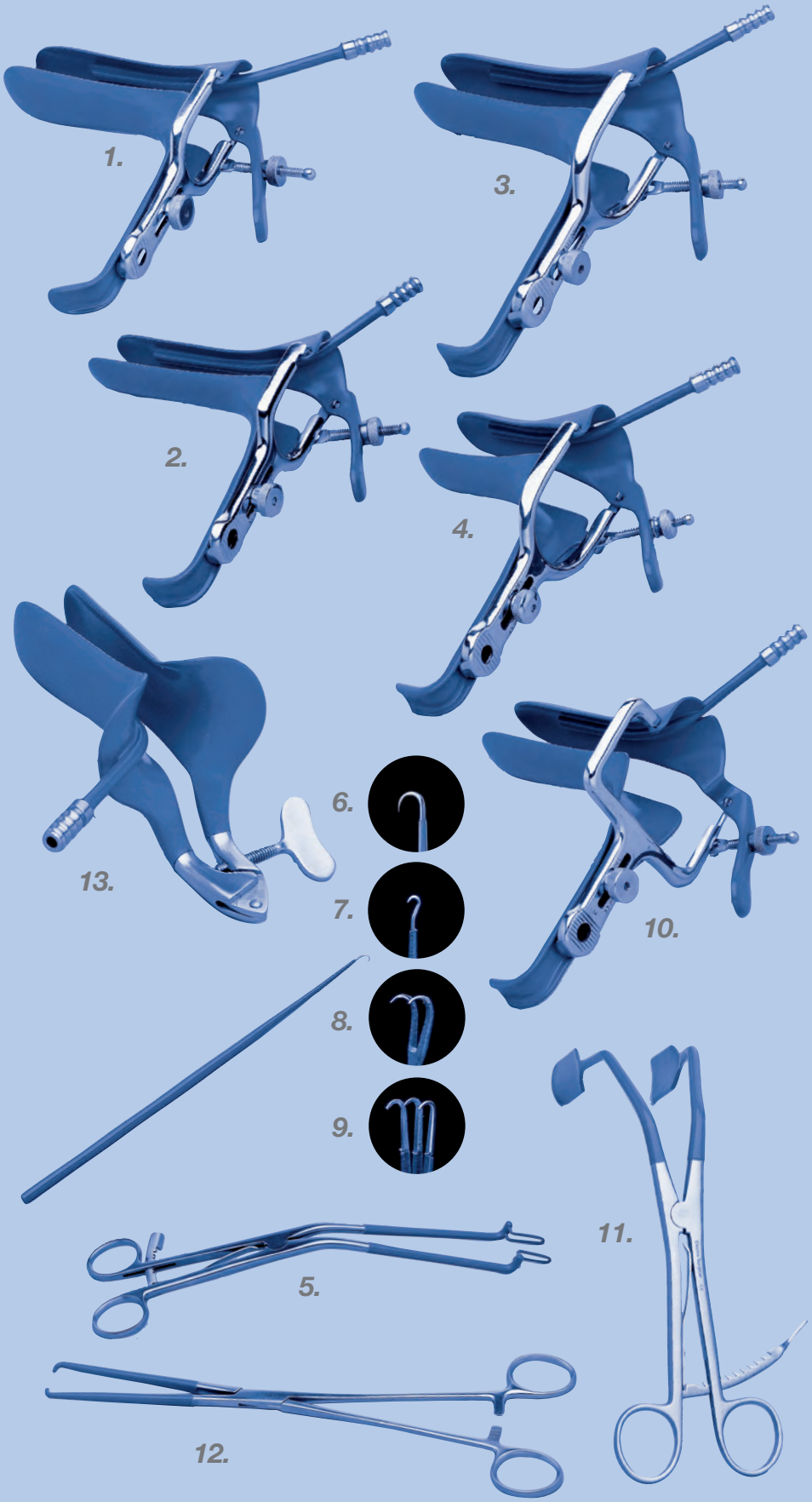

Non-Conductive Electrosurgical Instruments & Specula

1. Graves Speculum with smoke tube
Item n°130-100 (Lg.)
Item n°130-101 (Med.)
Item n°130-102 (Sml.)
2. Pederson Speculum with smoke tube
Item n°130-103 (Lg.)
Item n°130-104 (Med.)
Item n°130-105 (sml.)
3. See-More Speculum with smoke tube Item n°130-110 (Lg.)
Item n°130-111 (Med.)
Item n°130-109 (Sml.)
4. Mini See-More Speculum with smoke tube
Item n°130-113
Blade Size: L 70 x W 30mm
5. Kogan Endocervical Speculum
Item n°130-130 (5mm, tips)
Item n°130-131 (4mm, tips)
Item n°133-132 (6mm, tips)
6. Emmett Hook Item n°130-151
7. Iris Hook Item n°130-150
8. Two-Prong Hook Item n°130-154
9. Three-Prong Hook Item n°130-155
10. See-More Speculum with smoke tube
Item n°130-112 (XL)
11. Lateral Vaginal Retractor
Item n°130-141
12. Schroeder Tenaculum
Item N°130-160 (Exposed tips)
Item n°130-161 (coated tips)
13. Collin Speculum with smoke tube
Item n°130-120 (Sml.)
Item n°130-121 (Med.)
Item n°130-122 (Lg.)

- *All specula incorporate a smoke evacuation tube.*
- *All instruments are protected by the highest quality, fully autoclavable blue coating.*

All these coated instruments are also available in black (anti-reflexion) for use with lasers.

Med SYS

Universal Electrosurgical Electrodes and Accessories

Reusable Handle
Foot Activated

Item n°110-006

Item n°110-007

Reusable Handle
Hand Activated

Item n°110-014

Pincer Cable
for interconnection
(Specificity E.S. Generator)
Item n°110-009

Disposable
Dispersive Pads
(box of 10)
Item n°110-008

*Sterile disposable Item #	Reusable Item #	
120-001	120-001 R	0,3 cm dia x 13 cm Shaft
120-002	120-002 R	0,5 cm dia x 13 cm Shaft
120-010	120-010 R	Needle 0.8 mm dia x 16 mm x 13 cm Shaft
120-011	120-011 R	Needle 0.8 mm dia x 16 mm x 13 cm Shaft
120-020	120-020 R	1.0 cm x 0.5 cm x 13 cm Shaft
120-021	120-021 R	1.0 cm x 1.0 cm x 13 cm Shaft
120-022	120-022 R	1.5 cm x 0.8 cm x 13 cm Shaft
120-026	120-026 R	1.5 cm x 1.5 cm x 13 cm Shaft
120-023	120-023 R	2.0 cm x 0.8 cm x 13 cm Shaft
120-033	120-033 R	2.0 cm x 1.0 cm x 13 cm Shaft
120-027	120-027 R	2.0 cm x 1.3 cm x 13 cm Shaft
120-024	120-024 R	2.0 cm x 1.5 cm x 13 cm Shaft
120-028	120-028 R	2.0 cm x 2.0cm x 13 cm Shaft
120-030	120-030 R	1.0 cm x 0.4 cm x 5.5 cm Shaft
120-031	120-031 R	1.0 cm x 0.8 cm x 13 cm Shaft
120-032	120-032 R	1.0 cm x 0.4 cm x 13 cm Shaft
120-042	120-042 R	13 cm Blade

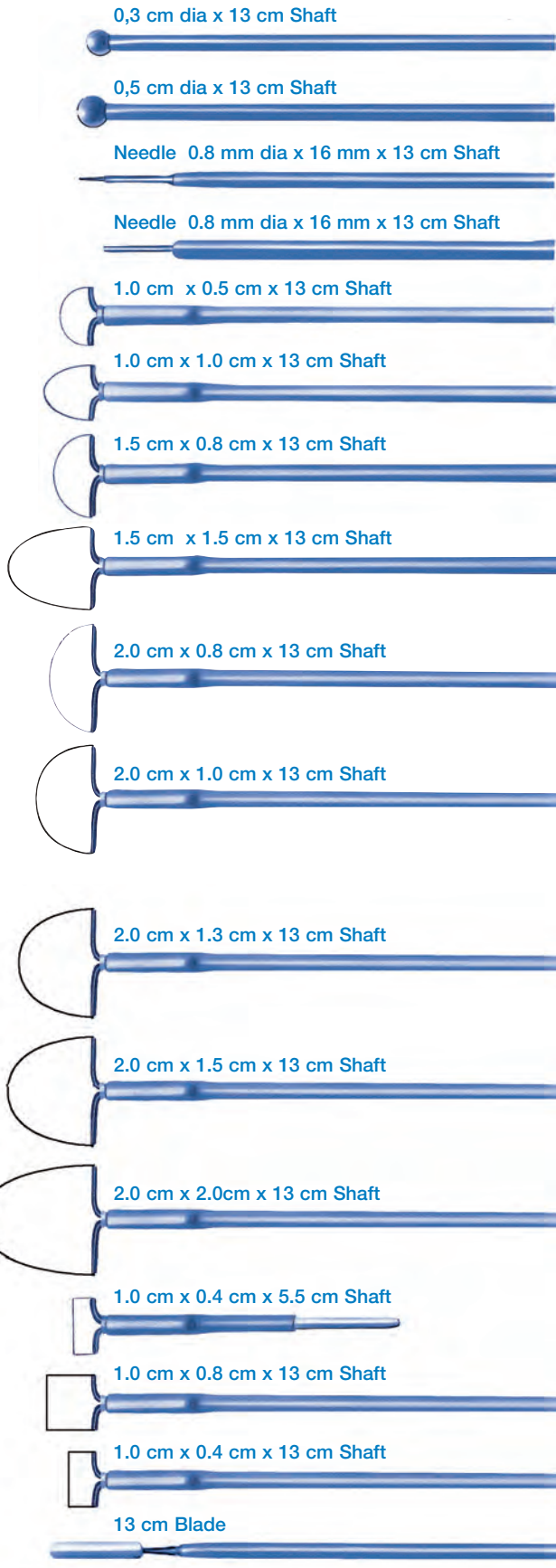

• **Specifications :** Standard connector 2.4 mm diameter - Finest tungsten medical grade wire - Perfect insulation.
*Boxes of 5 single use sterile package - Illustrations show approximate size.

ElectroSurgical Bipolar Forceps

180-101
1 mm
19 cm

180-100
Pointed
19 cm

180-110
1 mm
19 cm

180-111
2 mm
19 cm

180-120
Pointed
19 cm

180-121
1 mm
19 cm

180-122
2 mm
19 cm

180-130
Pointed
10,5 cm

180-131
Blunt
10,5 cm

180-140
Pointed
10,5 cm

180-141
Blunt
10,5 cm

180-200

- Highest quality
- Autoclavable at 134°C
- Guide stop for permanent alignment
- European standard flat-connector
- Non -conductive coating
- For precise surgery
- Autoclavable cable with small plugs

- Individually packed non sterile
- Autoclavable
- Available sterile disposable on request

Illustrations show approximate size

ElectroSurgical Reusable Electrodes

Ball Electrodes

125-001 Ø 3 mm Total length 5cm

125-002 Ø 5 mm Total length 5cm

Needle Electrodes

125-011 Fine Ø 0,8 mm x 17 mm Total length 7cm

125-011A Fine Ø 0,8 mm x 17 mm Angled

125-016 Ø 1 mm

125-016MF Ø 1 mm

125-017 Ø 1,7 mm

Ring Electrodes

125-025 Ø 5 mm Shaft length 4,5cm

125-020 Ø 6 mm Shaft length 4,5cm

125-021 Ø 8 mm Shaft length 4,5cm

125-022 Ø 10 mm Shaft length 4,5cm

125-023 Ø 12 mm Shaft length 4,5cm

125-026 Ø 15 mm Shaft length 4,5cm

125-024 Ø 20 mm Shaft length 4,5cm

Blade Electrodes

125-040 Blade Total length 7cm

125-040MF Blade Total length 7cm

125-041 Blade Total length 7cm

Cervix dilators

Cervix Dilator Quick
Ref. 260-700
(box of 50)

Cervix Dilator Slow
Ref. 260-600
(box of 50)

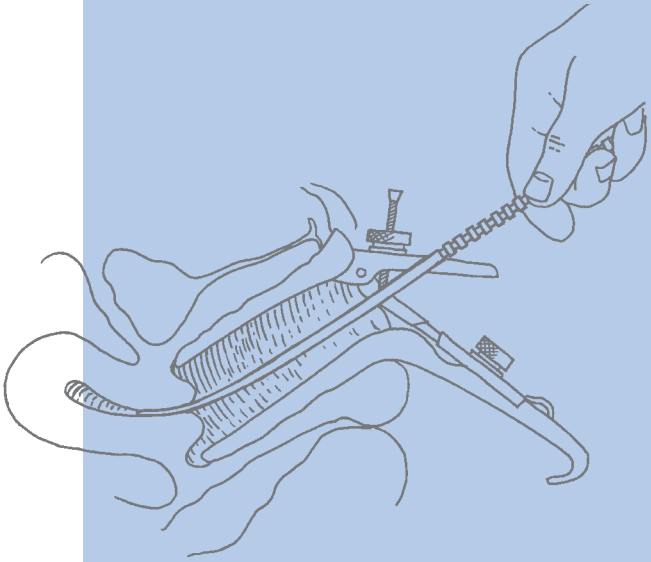

- gentle dilation of the stenotic os

- use prior to hysteroscopy, placement of IUD, endometrial biopsy

- single use, sterile packed

- two models :

- *Cervix Dilator Slow*
  Ref. 260-600
  dilates from 1,5 -> 6mm
  over 55mm.

- *Cervix Dilator Quick*
  Ref. 260-700
  dilates from 1,6 -> 6mm
  over 45mm.

Endometrial
Samplers and dilators

MES (Medsys Endometrial Sampler) (280-725)

- For maximum patient safety and comfort
- Optimum sample recovery
- 3mm plus O.D. for ample biopsy
- Double O-ring mechanism assures optimal suction

MES (Medsys Endometrial Sampler with Syringe) (280-655)

- Randall-like cutting edge assures sample
- Syringe provides extra vacuum
- Convenient 3mm O.D
- Angled for left or right cornual selection

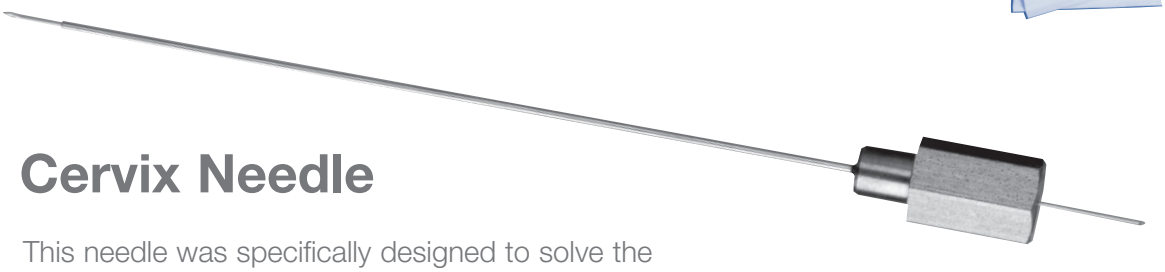

Cervix Needle

This needle was specifically designed to solve the problem of applying injections to the cervix. Distance and tough cervical tissue can make injection difficult with standard needles. With its reinforced and extended shaft, the Cervix Needle makes cervical application an easy procedure. The Cervix Needle only attaches to a ”dental style” cartridge syringe.

Item n° 606-600
Box of 6
Available on request :
cartridge syringe
Item n° 607-000

Biopsy forceps

7x3 mm
TISCHLER
Item n°160-170

3x9 mm
KEVORKIAN
Item n°160-172

2,3x4 mm
BABY TISCHLER
Item n°160-171

3x5 mm
BURKE STYLE
Item n°160-174

Available on request :

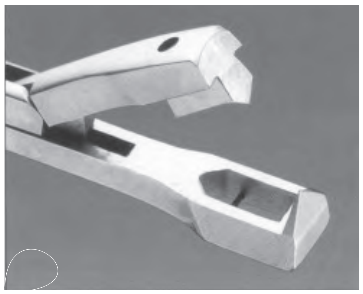

7mmx3mm
Item n°160-175

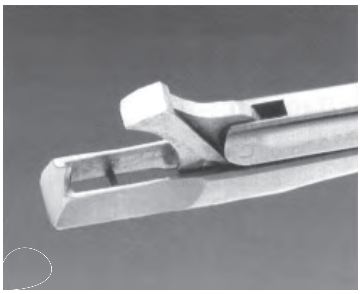

4mmx2,3mm
Item n°160-176

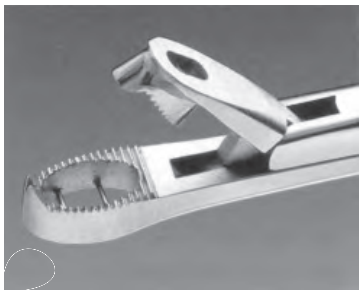

6,5mmx4mm
Item n°160-177

Biopsy forceps with rotating shaft

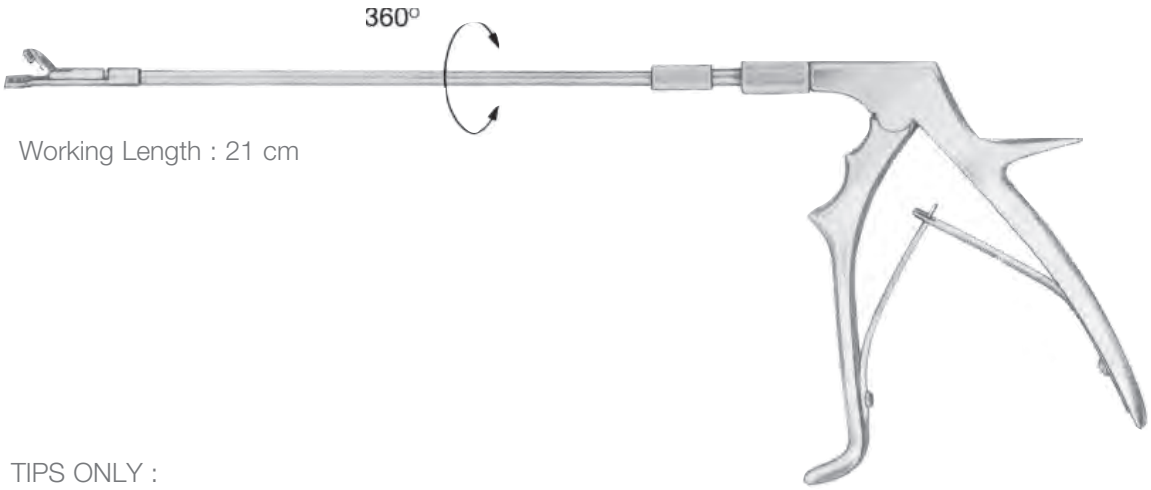

Working Length : 21 cm

TIPS ONLY :

Item n°160-181 KEVORKIAN
Item n°160-182 TISCHLER
Item n°160-183 BABY TISCHLER
Item n°160-184 OVAL

HANDLE ONLY :

Item n°160-180

3x7 mm
TISCHLER
Item n°160-186

3x9 mm
KEVORKIAN
Item n°160-185

2,3x4 mm
BABY TISCHLER
Item n°160-187

3x5 mm
OVAL
Item n°160-188

Biopsy Forceps

EPPENDORFER
Item n°160-190
Working Length : 20 cm

Item n°160-192
Working Length : 23 cm

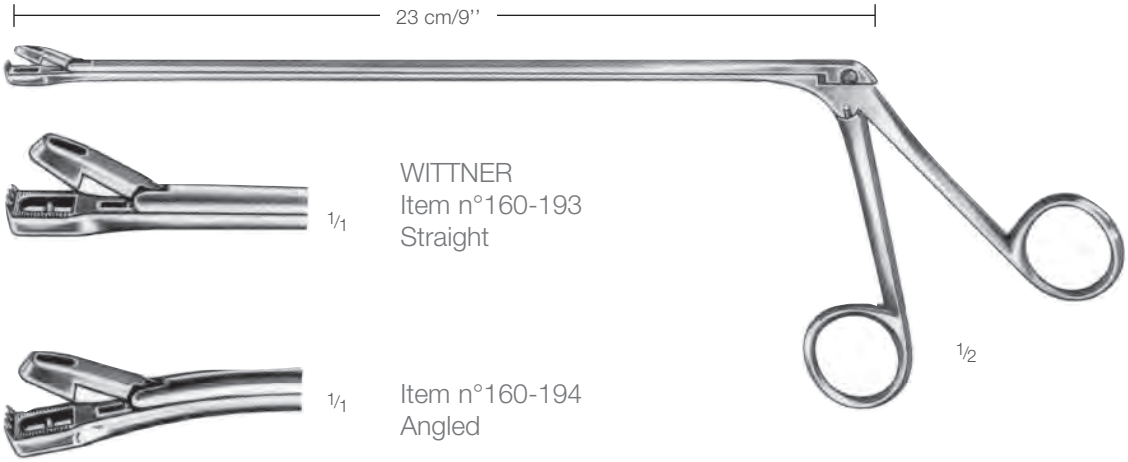

WITTNER
Item n°160-193
Straight

Item n°160-194
Angled

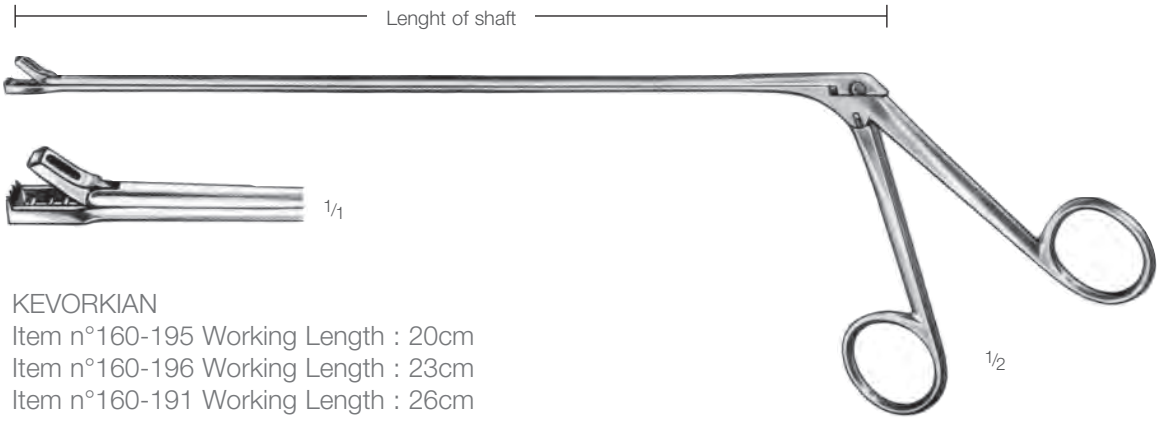

KEVORKIAN
Item n°160-195 Working Length : 20cm
Item n°160-196 Working Length : 23cm
Item n°160-191 Working Length : 26cm

Biopsy forceps

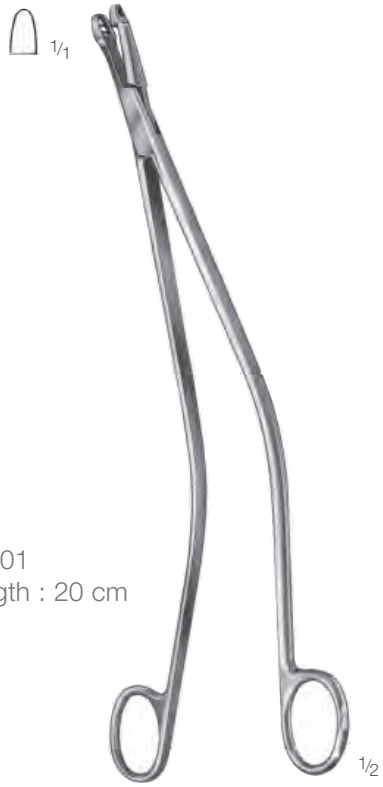

SCHUBERT
Item n°160-201
Working Length : 20 cm

SCHUBERT
Item n°160-202 21 cm
Item n°160-203 29 cm

VAN DOREN
Item n°160-205 24 cm

With Ratchet

VAN DOREN
Item n°160-204
24 cm

Endocervical and endometrial curettes

Ø 4 mm

NOVAK
Item n°160-213 1 mm
Item n°160-210 2 mm
Item n°160-211 3 mm
Item n°160-212 4 mm

MINI-KERVORKIAN
Item n°160-223

ENDOCURETTE
Item n°160-224 30 cm

Works by rotating

Item n°160-221

Item n°160-220

Item n°160-222

KEVORKIAN

Uterine curettes and sounds

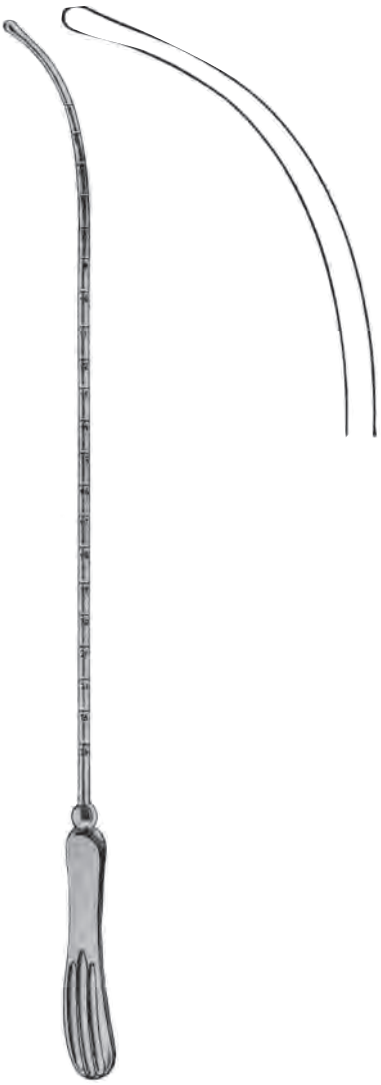

SIMS
With graduation in cm
Item n°160-298 Malleable 32 cm
Item n°160-299 Rigid 32 cm

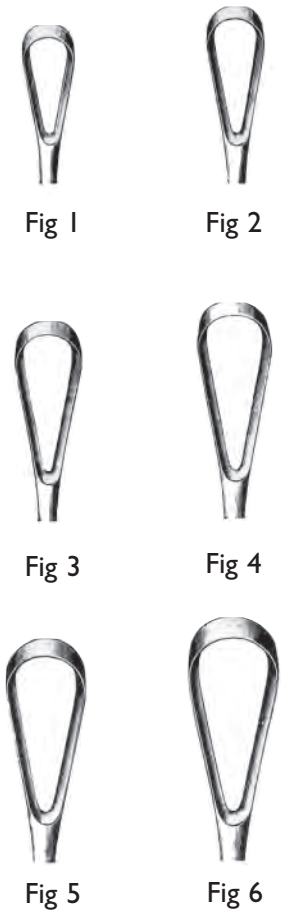

SIMS
24,5-26 cm long
Sharp

Rigid		Malleable
Item n° 160-250	fig.1 : 7mm	160-256
Item n° 160-251	fig.2 : 8mm	160-257
Item n° 160-252	fig.3 : 9mm	160-258
Item n° 160-253	fig.4 : 11mm	160-259
Item n° 160-254	fig.5 : 12mm	160-260
Item n° 160-255	fig.6 : 14mm	160-261

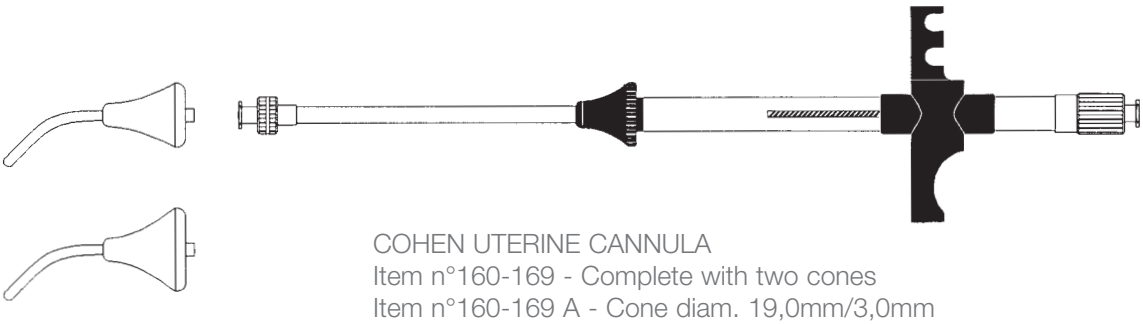

COHEN UTERINE CANNULA
Item n°160-169 - Complete with two cones
Item n°160-169 A - Cone diam. 19,0mm/3,0mm
Item n°160-169 B - Cone diam. 25,0mm/3,0mm

Tenaculum forceps and hooks

SCHROEDER
Item n°160-160
25 cm

BRAUN
Item n°160-161
25 cm

KEYES VULVAR PUNCHES

Item n°160-402 2 mm
Item n°160-403 3 mm
Item n°160-404 4 mm
Item n°160-405 5 mm
Item n°160-406 6 mm
Item n°160-408 8 mm
Item n°160-400 SET
Six sizes 2-8 mm

HOOKS

EMMET
Item n°160-151

LASER IRIS
Item n°160-153

IRIS
Item n°160-150

Item n°160-154
Two-Prong Hook

Item n°160-155
Three-Prong Hook

Lateral vaginal retractor and speculums

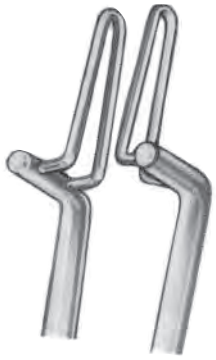

Item n°160-132
5mm

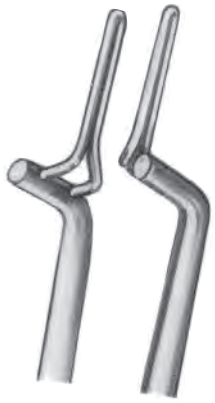

Item n°160-130
3 mm

KOGAN
Item n°160-131
4 mm

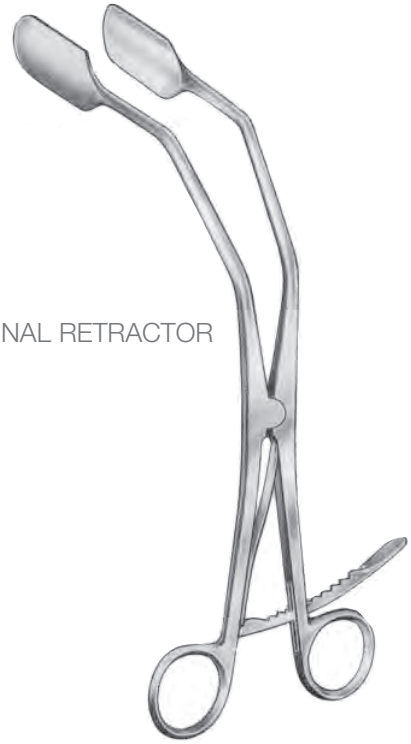

LATERAL VAGINAL RETRACTOR
Item n°160-141

COLLIN
Item n°160-120 Small
Item n°160-121 Medium
Item n°160-122 Large

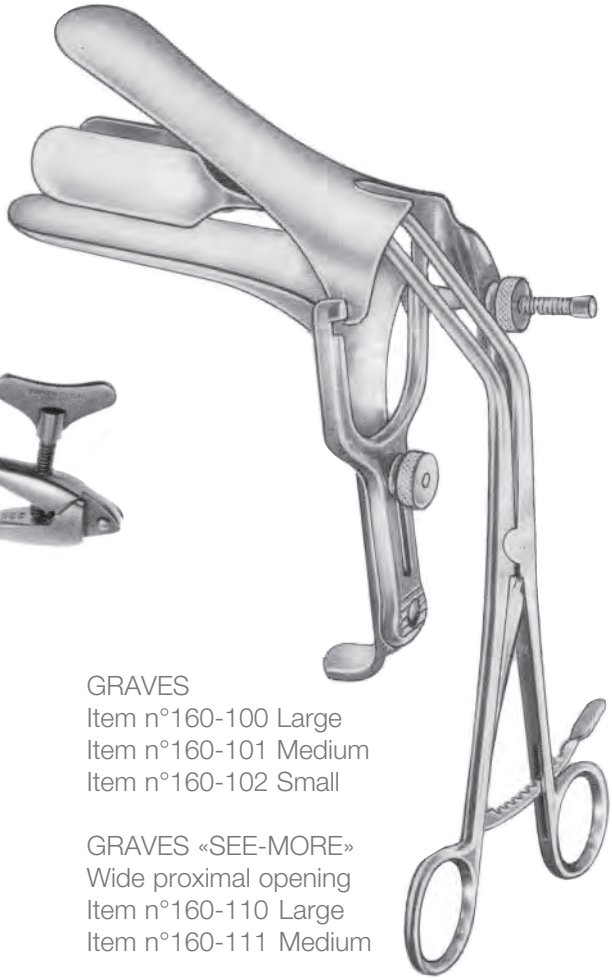

GRAVES
Item n°160-100 Large
Item n°160-101 Medium
Item n°160-102 Small

GRAVES «SEE-MORE»
Wide proximal opening
Item n°160-110 Large
Item n°160-111 Medium

Lateral vaginal retractor and speculums

CUSCO

a mm	b mm	Item n°	
75	17	160-127	Virgin Size

CUSCO

a mm	b mm	Item n°	
75	32	160-124	Small
85	35	160-125	Medium
100	35	160-126	Large

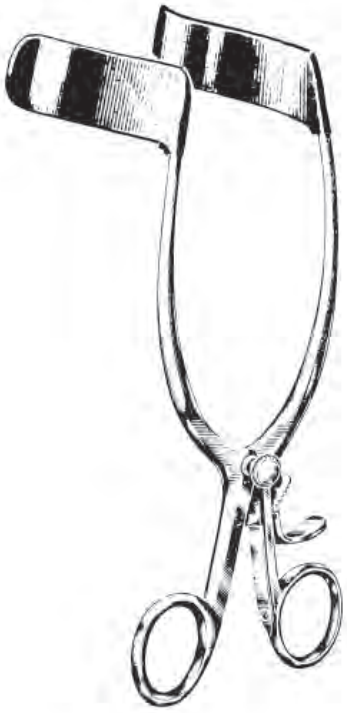

Redundant wall retractor
Item n° 160-140

Vulsellum and sponge forceps

MUSEUX
Item n°040-001 # 1
Item n°040-002 # 2
Item n°040-003 # 3
24 cm

FOERSTER
Item n°040-024
24 cm

FOERSTER
Item n°040-124
24 cm

BOZEMANN
Item n°040-226
26 cm

DESJARDIN
Item n°160-134
23 cm

MAIER
Item n°040-326 straight
Item n°040-426 curved
26 cm

Scissors

blunt/blunt straight
Item n°000-013 13 cm
Item n°000-014 14 cm
Item n°000-015 15 cm
Item n°000-016 16 cm
Item n°000-018 18 cm

sharp/sharp straight
Item n°000-113 13 cm
Item n°000-114 14 cm
Item n°000-115 15 cm
Item n°000-116 16 cm
Item n°000-118 18 cm

sharp/blunt straight
Item n°000-213 13 cm
Item n°000-214 14 cm
Item n°000-215 15 cm
Item n°000-216 16 cm
Item n°000-218 18 cm

blunt/blunt curved
Item n°000-313 13 cm
Item n°000-314 14 cm
Item n°000-315 15 cm
Item n°000-316 16 cm
Item n°000-318 18 cm

sharp/sharp curved
Item n°000-413 13 cm
Item n°000-414 14 cm
Item n°000-415 15 cm
Item n°000-416 16 cm
Item n°000-418 18 cm

sharp/blunt curved
Item n°000-513 13 cm
Item n°000-514 14 cm
Item n°000-515 15 cm
Item n°000-516 16 cm
Item n°000-518 18 cm

METZENBAUM
(LAHEY)
Item n° 003-015
14cm

METZENBAUM
(LAHEY)
Item n° 003-115
14cm

METZENBAUM
Item n°
003-018-18cm
Item n°
003-020-20cm

METZENBAUM
Item n°
003-118-18cm
Item n°
003-120-20cm

RAGNELL (KILNER)
Item n° 003-913 - 13cm
Item n° 003-915 - 15cm

BRAUN-STADLER
Item n° 003-815 - 15cm

BRAUN-STADLER
Item n° 003-821 - 21cm

MAYO
Item n° 000-614 - 14cm
Item n° 000-615 - 15,5cm
Item n° 000-617 - 17cm
Item n° 000-623 - 23cm

MAYO-STILLE
Item n° 000-815 - 15cm
Item n° 000-817 - 17cm
Item n° 000-823 - 23cm

MAYO
Item n° 000-714 - 14cm
Item n° 000-715 - 15,5cm
Item n° 000-717 - 17cm
Item n° 000-723 - 23cm

MAYO-STILLE
Item n° 000-915 - 15cm
Item n° 000-917 - 17cm
Item n° 000-923 - 23cm

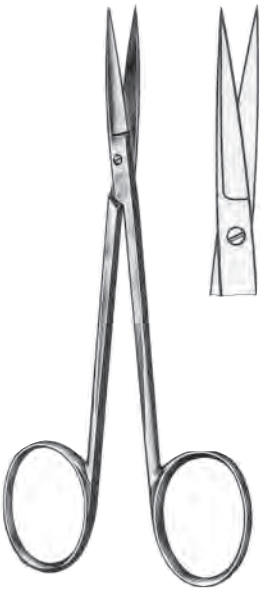

IRIS Standard
Straight
Item n°002-009 9,0 cm
Item n°002-010 10,5 cm
Item n°002-011 11,5 cm
Item n°002-012 12,5 cm

IRIS Standard
Curved
Item n°002-109 9,0 cm
Item n°002-110 10,5 cm
Item n°002-111 11,5 cm
Item n°002-112 12,5 cm

SIMS
sharp/sharp straight
Item n°001-220 20,0 cm
Item n°001-221 21,5 cm
Item n°001-223 23,0 cm

SIMS
blunt/blunt straight
Item n°001-020 20,0 cm
Item n°001-021 21,5 cm
Item n°001-023 23,0 cm

SIMS
sharp/blunt straight
Item n°001-120 20,0 cm
Item n°001-121 21,5 cm
Item n°001-123 23,0 cm

SIMS
blunt/blunt curved
Item n°001-320 20,0 cm
Item n°001-321 21,5 cm
Item n°001-323 23,0 cm

SIMS
sharp/blunt curved
Item n°001-520 20,0 cm
Item n°001-521 21,5 cm
Item n°001-523 23,0 cm

SIMS
sharp/sharp curved
Item n°001-420 20,0 cm
Item n°001-421 21,5 cm
Item n°001-423 23,0 cm

Parametrium Scissors

Strongly Curved w/ Gold Rings
410-223 23cm
410-226 26.5cm
410-230 30cm

Slightly Curved w/ Gold Rings
410-123 23cm
410-126 26.5cm
410-130 30cm

Angulated w/ Gold Rings
410-323 23cm
410-326 26.5cm
410-330 30cm

Parametrium scissors are a complete set of parametrium scissors designed to match precisely to the special hysterectomy clamp jaw curvatures. The scissors guarantee precise cutting. The scissors feature a tungsten blade and a serrated blade to ensure grip during cutting. The scissors are available in three lengths and three jaw configurations.

Dissecting forceps

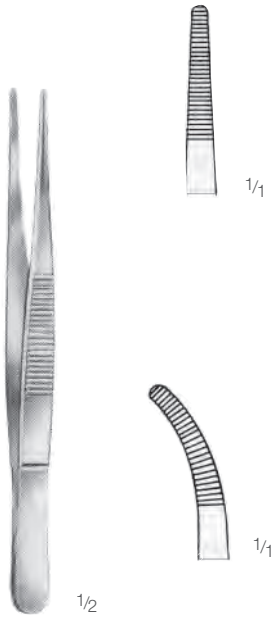

Straight
Item n°010-011 11,5 cm
Item n°010-013 13,0 cm
Item n°010-014 14,5 cm
Item n°010-016 16,0 cm
Item n°010-018 18,0 cm
Item n°010-020 20,0 cm
Item n°010-023 23,0 cm
Item n°010-025 25,0 cm
Item n°010-030 30,0 cm

Curved
Item n°011-011 11,5 cm
Item n°011-013 13,0 cm
Item n°011-014 14,5 cm
Item n°011-016 16,0 cm
Item n°011-018 18,0 cm
Item n°011-020 20,0 cm
Item n°011-023 23,0 cm
Item n°011-025 25,0 cm
Item n°011-030 30,0 cm

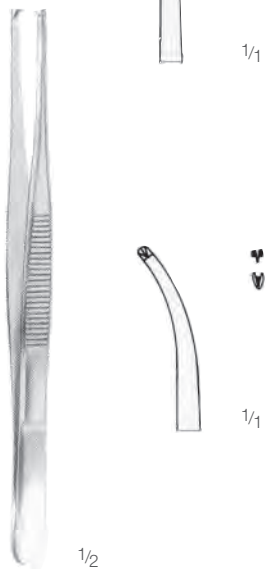

Straight
Item n°012-011 11,5 cm
Item n°012-013 13,0 cm
Item n°012-014 14,5 cm
Item n°012-016 16,0 cm
Item n°012-018 18,0 cm
Item n°012-020 20,0 cm
Item n°012-025 25,0 cm
Item n°012-030 30,0 cm

Curved
Item n°013-011 11,5 cm
Item n°013-013 13,0 cm
Item n°013-014 14,5 cm
Item n°013-016 16,0 cm
Item n°013-018 18,0 cm
Item n°013-020 20,0 cm
Item n°013-025 25,0 cm
Item n°013-030 30,0 cm

DE BAKEY

Item n°014-016 16,0 cm
Item n°014-020 20,0 cm
Item n°014-024 24,0 cm

Item n°015-016 16,0 cm
Item n°015-020 20,0 cm
Item n°015-024 24,0 cm
Item n°015-030 30,0 cm

Hemostatic forceps

CRILE
Item n°
020-010 020-011
14cm 14cm

RANKIN-CRILE
Item n°
020-410 020-411
16cm 16cm

CRILE
Item n°
020-012 020-013
14cm 14cm
1x2 teeth

RANKIN-CRILE
Item n°
020-412 020-413
16cm 16cm
1x2 teeth

HALSTED-MOSQUITO
Item n°
020-002 020-004
12,5cm 12,5cm

HALSTED-MOSQUITO
Item n°
020-003 020-005
14cm 14cm

HALSTED-MOSQUITO
Item n°
020-006 020-008
12,5cm 12,5cm
1x2 teeth

ROCHESTER-PEAN
Straight
Item n°020-016 16,0 cm
Item n°020-018 18,0 cm
Item n°020-020 20,0 cm
Item n°020-022 22,0 cm
Item n°020-024 24,0 cm
Item n°020-026 26,0 cm

ROCHESTER-PEAN
Curved
Item n°020-116 16,0 cm
Item n°020-118 18,0 cm
Item n°020-120 20,0 cm
Item n°020-122 22,0 cm
Item n°020-124 24,0 cm
Item n°020-126 26,0 cm

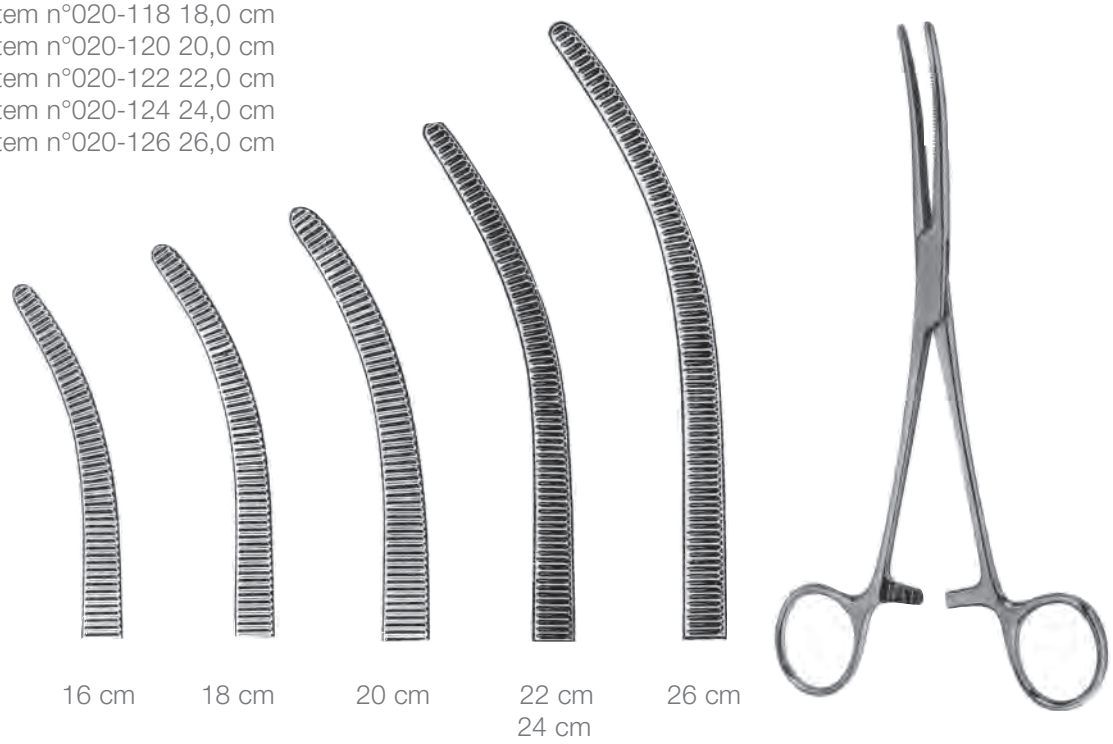

Hemostatic forceps

KOCHER
Straight
Item n°020-216 16,0 cm
Item n°020-218 18,0 cm
Item n°020-220 20,0 cm
Item n°020-222 22,0 cm
Item n°020-224 24,0 cm
Item n°020-226 26,0 cm

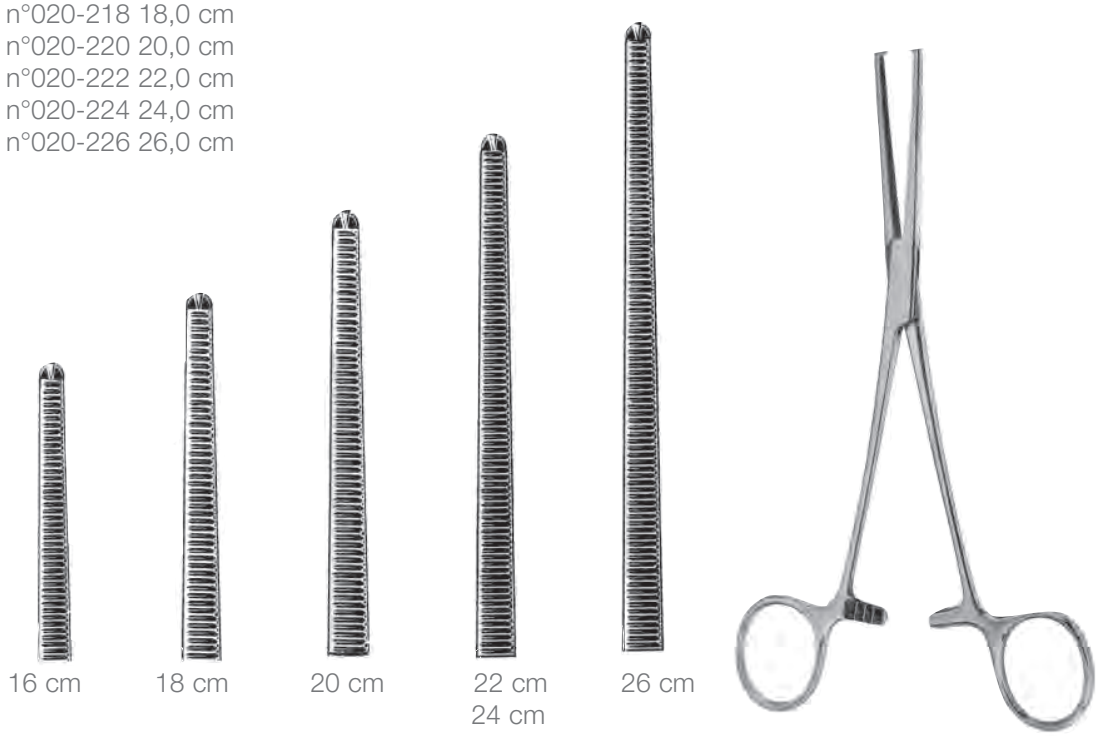

KOCHER
Curved
Item n°020-316 16,0 cm
Item n°020-318 18,0 cm
Item n°020-320 20,0 cm
Item n°020-322 22,0 cm
Item n°020-324 24,0 cm
Item n°020-326 26,0 cm

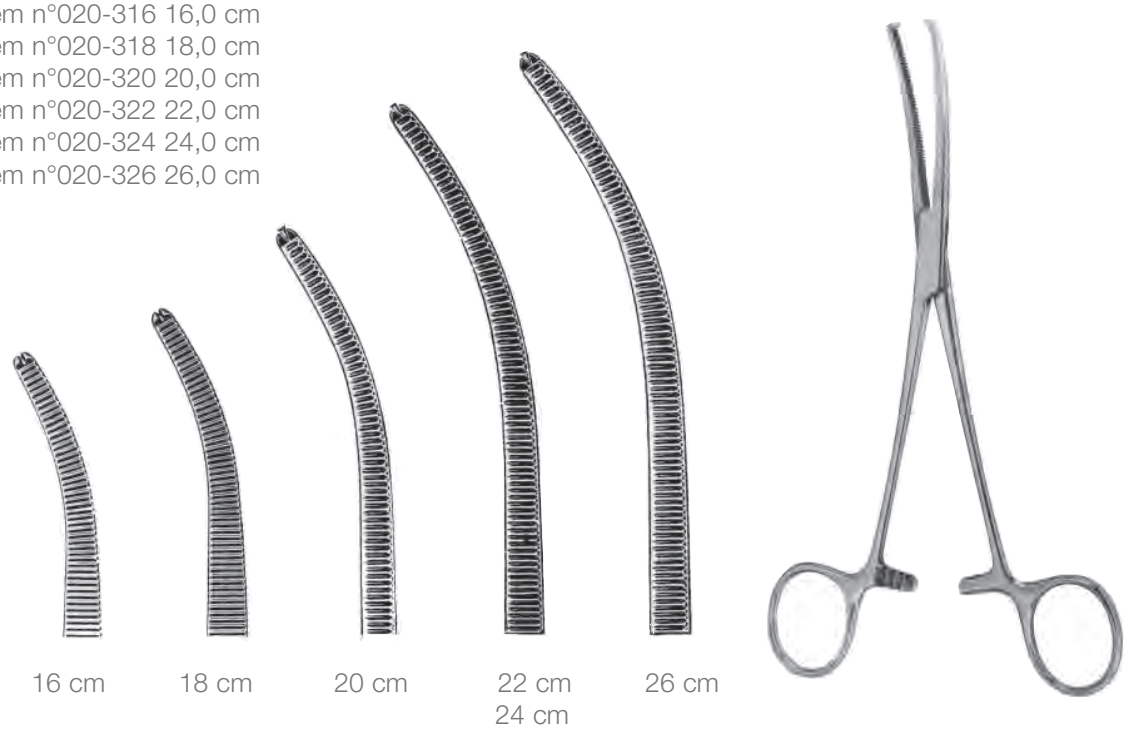

Clamp forceps

Item n°030-421

Item n°030-521

FAURE
21 cm

Item n°030-025
25 cm

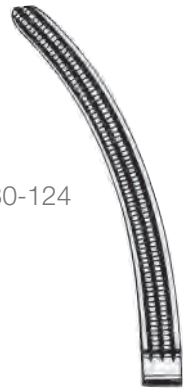

Item n°030-124
24,5 cm

Item n°030-224
24 cm

Item n°030-323
23 cm

GREEN-ARMYTAGE
Item n° 030-622
22 cm

WERTHEIM

Special Hysterectomy Clamps

Straight w/ Gold Rings

336-411 21cm
336-541 24cm
336-601 30cm
336-661 35cm

Angulated w/ Gold Rings

336-414 21cm
336-544 24cm
336-604 30cm
336-664 35cm

Slightly Curved w/ Gold Rings

336-412 21cm
336-542 24cm
336-602 30cm
336-662 35cm

Strongly Curved w/ Gold Rings

336-413 21cm
336-543 24cm
336-603 30cm
336-663 35cm

These clamps are well-balanced and have a sturdy, atraumatic longitudinal groove that guarantees a secure grip of tissue and prevents slippage. The hysterectomy clamps are available in four lengths and four jaw configurations.

Vaginal speculums

BREISKY
29 cm
160-350 100x20mm
160-351 100x25mm
160-352 100x30mm
160-353 100x35mm
160-354 100x40mm

BREISKY
32 cm
160-355 130x20mm
160-356 130x25mm
160-357 130x30mm
160-358 130x35mm
160-359 130x40mm

BREISKY
35 cm
160-360 160x20mm
160-361 160x25mm
160-362 160x30mm
160-363 160x35mm
160-364 160x40mm

BREISKY
37 cm
160-365 180x20mm
160-366 180x25mm
160-367 180x30mm
160-368 180x35mm
160-369 180x40mm

SIMON
28 cm
Item n° 160-300 115x22mm
Item n° 160-301 115x27mm

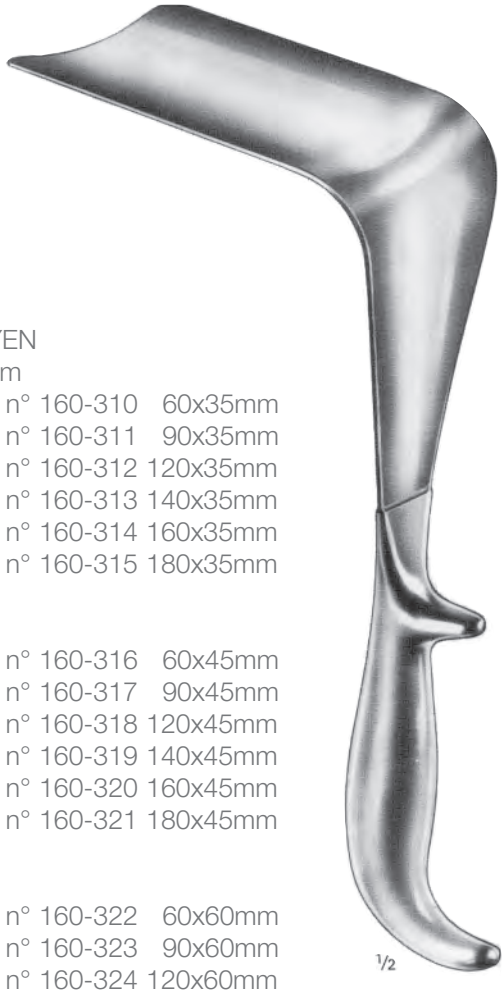

DOYEN
24 cm
Item n° 160-310 60x35mm
Item n° 160-311 90x35mm
Item n° 160-312 120x35mm
Item n° 160-313 140x35mm
Item n° 160-314 160x35mm
Item n° 160-315 180x35mm

Item n° 160-316 60x45mm
Item n° 160-317 90x45mm
Item n° 160-318 120x45mm
Item n° 160-319 140x45mm
Item n° 160-320 160x45mm
Item n° 160-321 180x45mm

Item n° 160-322 60x60mm
Item n° 160-323 90x60mm
Item n° 160-324 120x60mm
Item n° 160-325 140x60mm
Item n° 160-326 160x60mm
Item n° 160-327 180x60mm

Needle holders with tungsten carbide insert jaws

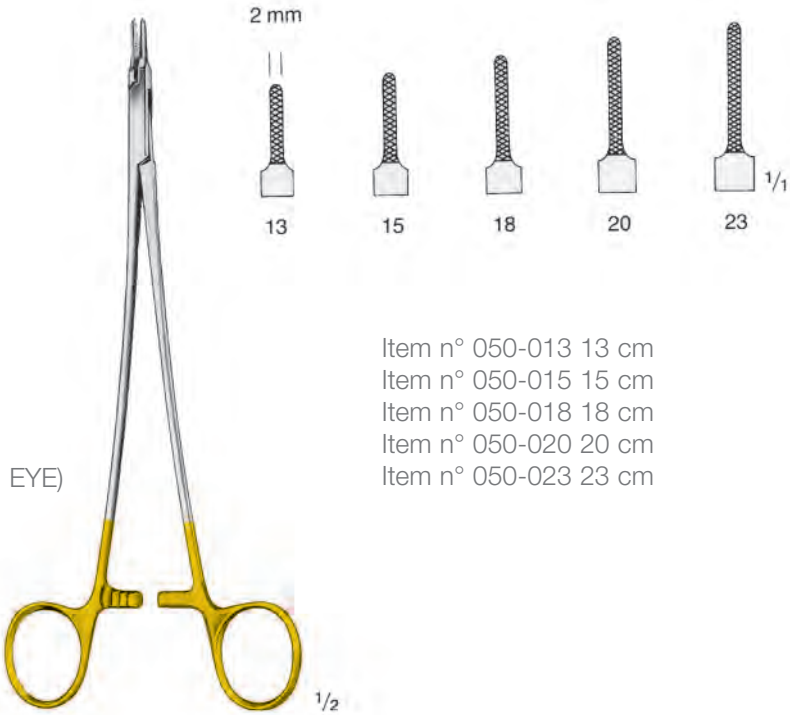

RYDER (FRENCH EYE)

Item n° 050-013 13 cm
Item n° 050-015 15 cm
Item n° 050-018 18 cm
Item n° 050-020 20 cm
Item n° 050-023 23 cm

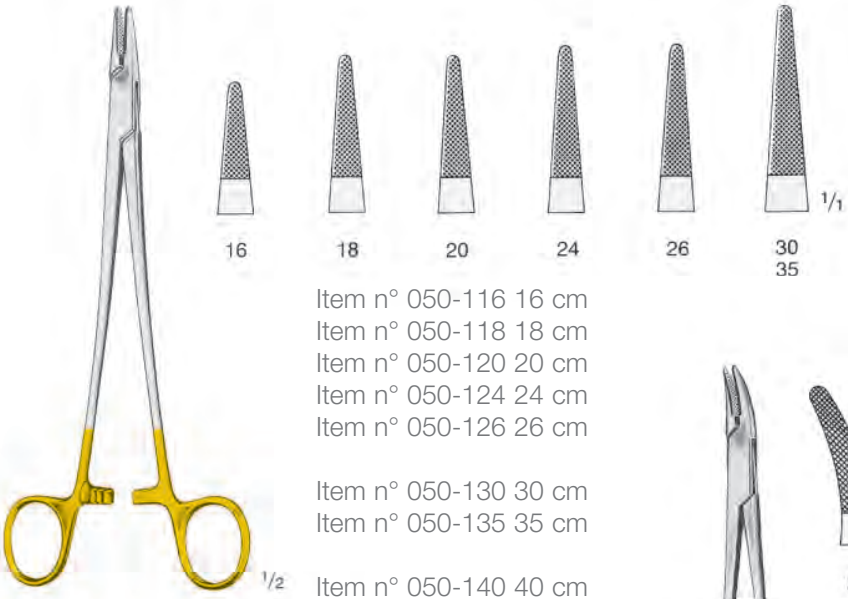

MAYO-HEGAR

Item n° 050-116 16 cm
Item n° 050-118 18 cm
Item n° 050-120 20 cm
Item n° 050-124 24 cm
Item n° 050-126 26 cm

Item n° 050-130 30 cm
Item n° 050-135 35 cm

Item n° 050-140 40 cm

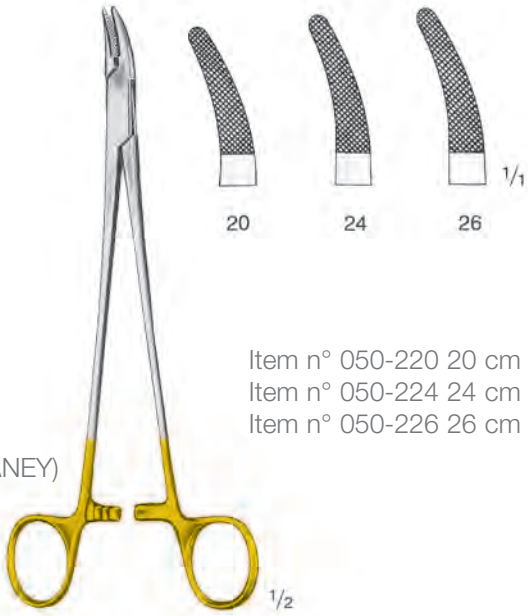

MAYO-HEGAR (HEANEY)

Item n° 050-220 20 cm
Item n° 050-224 24 cm
Item n° 050-226 26 cm

Needle holders with tungsten carbide insert jaws

HALSEY
Item n° 050-001
13,5cm

CRILE-WOOD
Item n°050-315
15cm

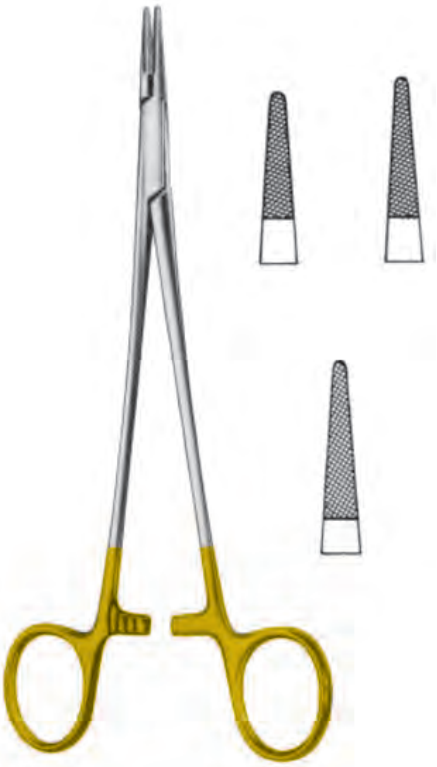

CRILE-WOOD (De Bakey)
Item n° 050-318 - 18cm
Item n° 050-320 - 20cm
Item n° 050-323 - 23cm

Monopolar insulated forceps and scissors

MAYO
Item n°
170-101 - 20cm
170-102 - 23cm

MAYO
Item n°
170-103 - 20cm
170-104 - 23cm

METZENBAUM
Item n°
170-105 - 18cm
170-106 - 20cm
170-107 - 23cm

Monopolar cable for these instruments.
Item n°170-108

GERALD
Item n°
170-005
18cm

GERALD
Item n°
170-006
18cm
(1 x 2)

Item n°
170-007-
18cm
170-008-
20cm
170-009-
25cm

DISSECTING FOR-
CEPS
SERRATED
Item n°
170-001-18cm
170-002-21cm
170-003-25cm
2mm tip width

ADSON BAYONET
SERRATED
Item n°
170-004-19cm
Long
2mm tip width

Look inside

Comprehensive Family of Products for Operating Room and Private Offices

- Full range of electrosurgery electrodes developed and manufactured in house for all applications including gyn, dermatology, gen surgery, cardio vascular, maxillo-facial...

- LapMan® robot for laparoscope manipulation.

- Speciality biopsy forceps.

- Next 200 electrosurgical generator and all its accessories.

- Large range of hysterectomy clamps and scissors.

- Endometrial Samplers.

- Os finder, flexible and gentle cervical dilator for hysterectomy, endometrial biopsy...

- High quality needle holders with tungsten carbide insert jaws.

Medsys s.a. • 39, rue Chainisse
B-5030 Gembloux • Belgium
Tel. : +32 81 56 84 84 • Fax : +32 81 56 88 84
E-mail : info@medsys.be
http: // www.medsys.be

Ref : P/N 9900 © Copyright 2009